HTKM10

Wall Bracket – EM26 – F8

hardware

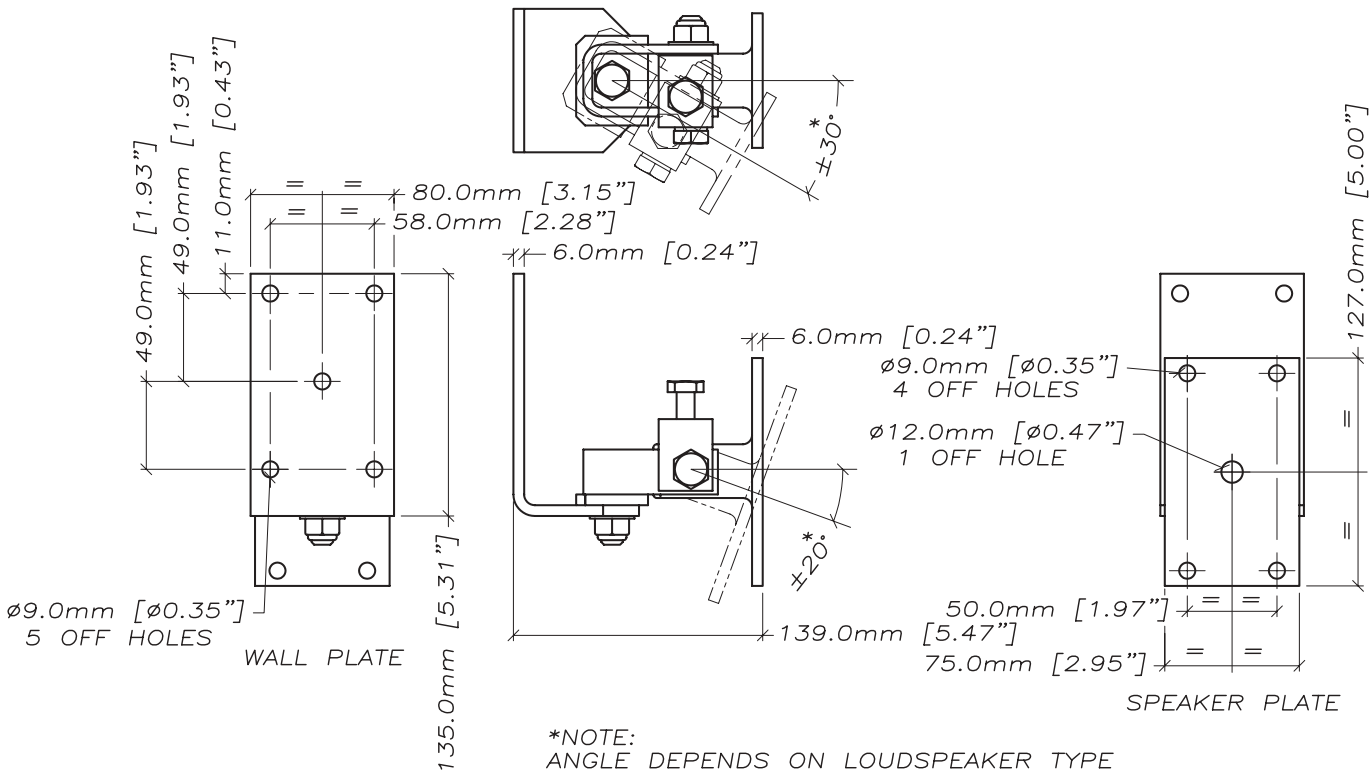

HTKM10

TO FIT LOUDSPEAKERS EM26 & F8

Century Point, Halifax Road, Cressex Business Park,
High Wycombe, Buckinghamshire HP12 3SL, England.
Telephone: +44 (0)1494 535312 Facsimile: +44 (0)1494 438669
E-mail: info@martin-audio.com
All information is Copyright © 2003 Martin Audio Ltd.

MARTIN AUDIO
LONDON

www.martin-audio.com