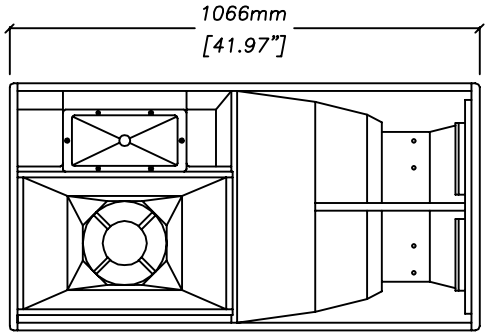

ALL DETAIL TYPICAL TO BOTH SIDES

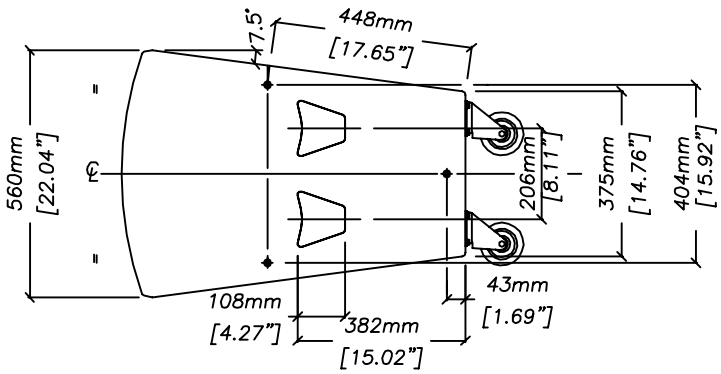

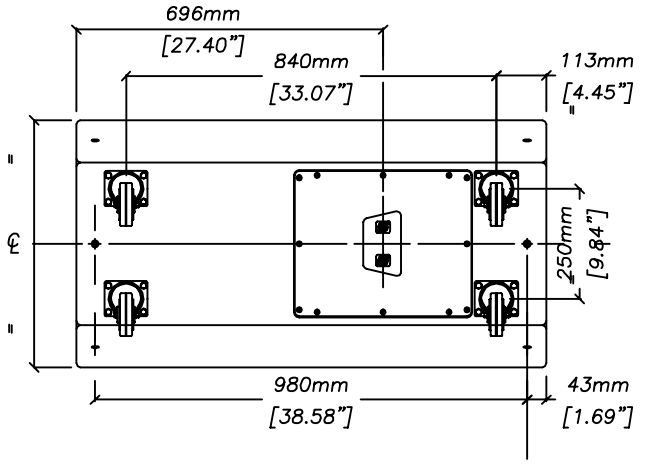

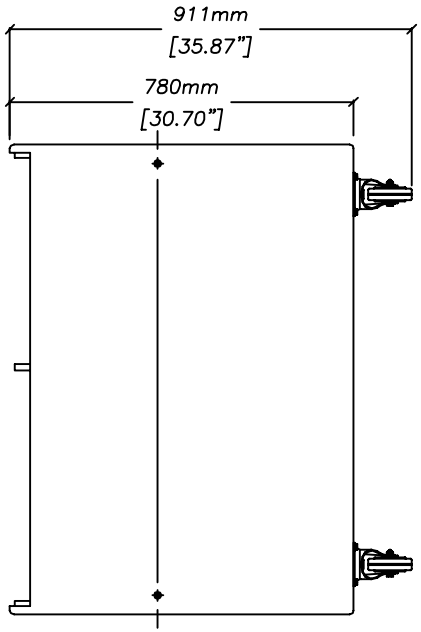

FH3

All information is Copyright © Martin Audio Ltd.